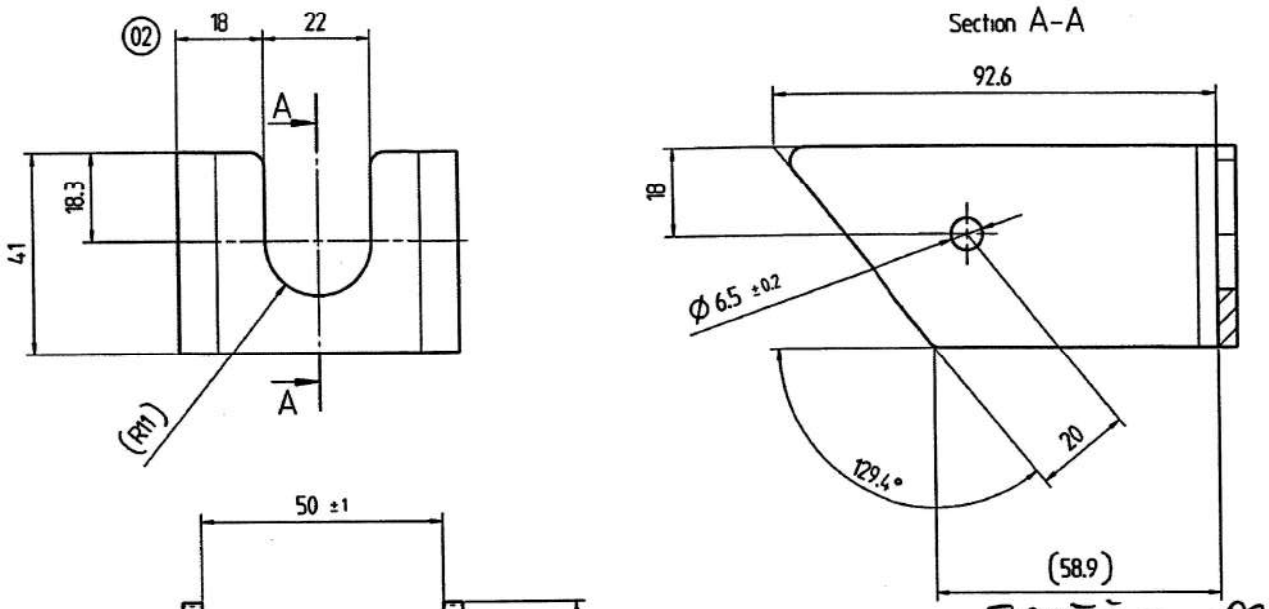

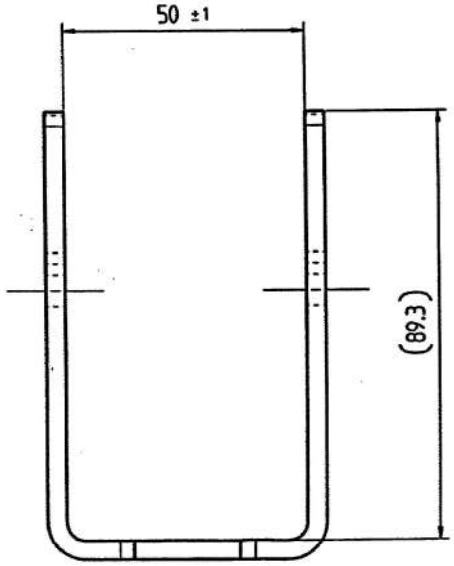

PŘEKLAD

dne: 17. 12. 2014

PROVEDL/A

VÍSEK

-3 -04- 2017

ARCHIV

4

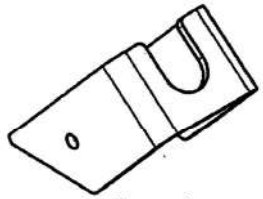

02B-ZM/17/00313-DOPLNĚNY KÓTY K OSÁM OHYBU NA LISTU Č.2

29.3.2017 HRUBÝ

TLOUŠŤKA MAT. NEKOT. RÁDIUSY RÁDIUS OHYBU

NOTA :

- Metal sheet thickness : 4 mm
- Radii without dimension : R = 3
- Bend radii : R = 4
- Unfolded length (for info) = 1

DÉLKA ROZLOŽENÍ

✓ NZ 14/01402

02A-ZM/16/01090-ZOBRAZEN SKUTEČNÝ TVAR DÍLCE S TECHNOLOGICKÝMI MŮSTKY.

21.10.2016 HRUBÝ

Condition at time of delivery	
de-scaled (degree of purity SA 2 1/2 acc. ISO 8501-1)	X
without burrs acc. WN 11310	
Permissible top-end rounding during flame cutting (also positive bead acc. WN 10572)	
oil-free / free of grease	
oiled	
oiling permissible	X
Indicate the required condition at time of delivery with an X.	

02

LASER cutting tolerances				
NOTA : min cutting radius without dimensions R = 1 mm unless otherwise specified				
≤ 30	30< ≤ 120	120< ≤ 400	400< ≤ 1000	1000 <
± 0,5	± 0,8	± 1,0	± 1,5	± 2,0

+0.5 / -0.5

First angle projection

General tolerance (GT) in mm

Size range: ≤ 30 | > 30 ≤ 120 | > 120 ≤ 400 | > 400 ≤ 1000 | > 1000

GT coarse

L	1	2	2	3	4
◁	1	2	4	6	

Lengths (L) and angle (L ∠) = ± GT

Tolerance Symbols ISO 1101

- ○ roundness = 1/2 m-Tol.
- ▱ straightness/flatness = GT
- ◎ concentricity/run out = GT
- ⌯ symmetry = GT
- / / parallelism = GT
- ⊕ position = GT

Languages: en,fr

Index	alteration	Change no	Fit	Toler.
02	Oiled --> Oiled permissible	T48720		
	Adding dim. 18 / Removing symetrical			

Inspection dim.

Auxiliary dim. ( )

	Date	Name
Drawn	9.1.2014	J.Fonteny
Checked	13.1.2014	F.Proust
Authd	22.1.2014	R.Pelletier
M.check.	20.1.2014	J.LeCesne

Material: S235JR according to EN10025-2

Blank no:

Title: support emergency off switch

Weight: in kg 0.2

PROD.

Scale 1:1

Sheet: 1 of: 2

Drawing number: / / 11914010911

Confidential document Refer to protection notice ISO 16016

Repl. Orig.

Released

11914010911d001 A3

B

A